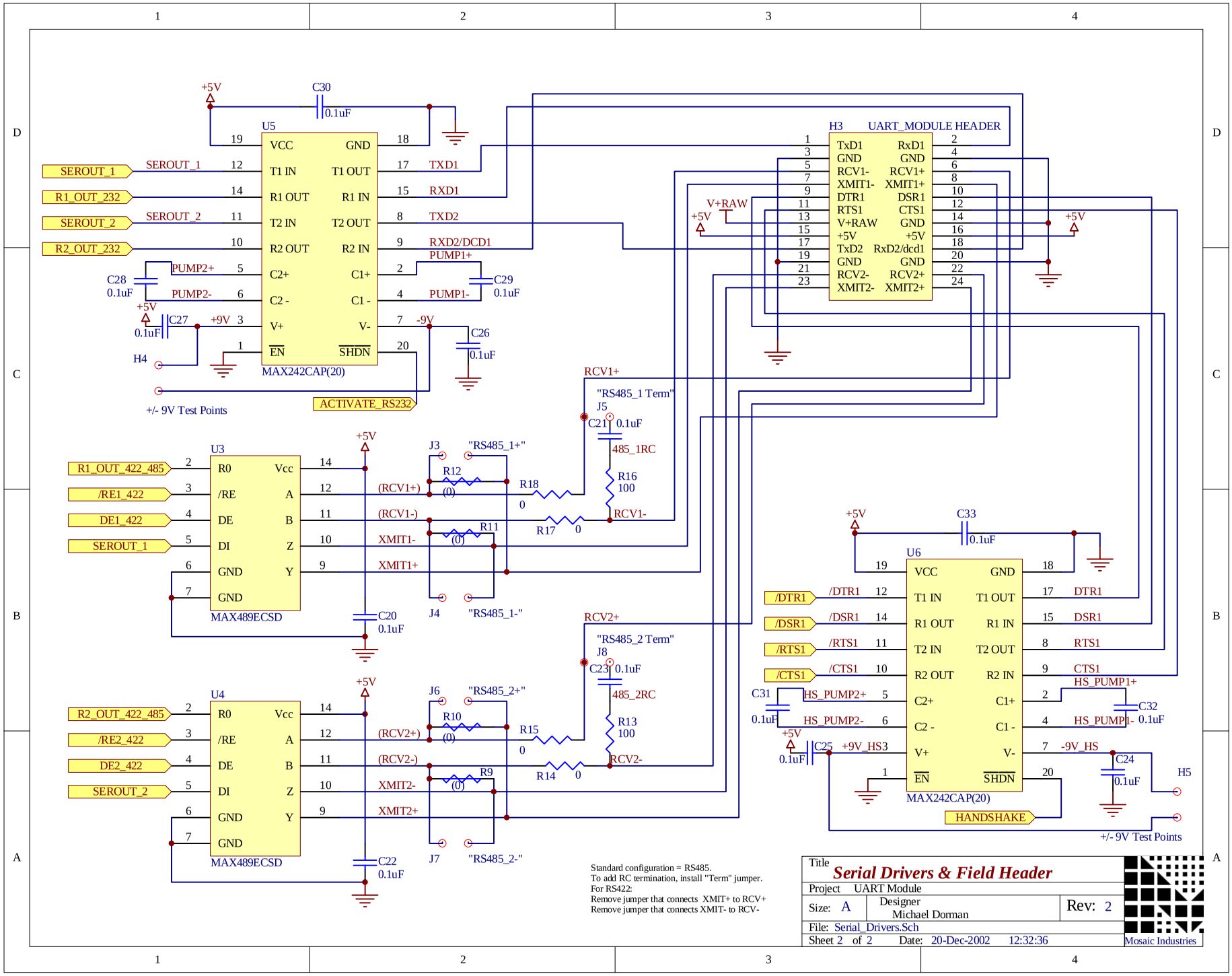
U5
MAX242CAP(20)
VCC
GND
T1 IN
T1 OUT
R1 OUT
R1 IN
T2 IN
T2 OUT
R2 OUT
R2 IN
C2+
C1+
C2 -
C1 -
V+
V-
EN
SHDN
SEROUT_1
R1_OUT_232
SEROUT_2
R2_OUT_232
TXD1
RXD1
TXD2
RXD2/DCD1
PUMP1+
PUMP1-
PUMP2+
PUMP2-
ACTIVATE_RS232
+/- 9V Test Points
H3
UART_MODULE HEADER
TxD1
RxD1
RCV1-
RCV1+
XMIT1-
XMIT1+
DTR1
DSR1
RTS1
CTS1
V+RAW
TxD2
RxD2/dcd1
RCV2-
RCV2+
XMIT2-
XMIT2+
U3
MAX489ECSD
R0
/RE
DE
DI
Vcc
A
B
Z
Y
R1_OUT_422_485
/RE1_422
DE1_422
SEROUT_1
(RCV1+)
(RCV1-)
XMIT1-
XMIT1+
"RS485_1+"
"RS485_1-"
"RS485_1 Term"
RCV1+
RCV1-
485_1RC
U4
R2_OUT_422_485
/RE2_422
DE2_422
SEROUT_2
(RCV2+)
(RCV2-)
XMIT2-
XMIT2+
"RS485_2+"
"RS485_2-"
"RS485_2 Term"
RCV2+
RCV2-
485_2RC
U6
/DTR1
/DSR1
/RTS1
/CTS1
HS_PUMP2+
HS_PUMP2-
HS_PUMP1+
HS_PUMP1-
+9V_HS
-9V_HS
HANDSHAKE
+/- 9V Test Points
Standard configuration = RS485.
To add RC termination, install "Term" jumper.
For RS422:
Remove jumper that connects XMIT+ to RCV+
Remove jumper that connects XMIT- to RCV-
Title
Serial Drivers & Field Header
Project UART Module
Size: A
Designer
Michael Dorman
Rev: 2
File: Serial_Drivers.Sch
Sheet 2 of 2
Date: 20-Dec-2002
12:32:36
Mosaic Industries