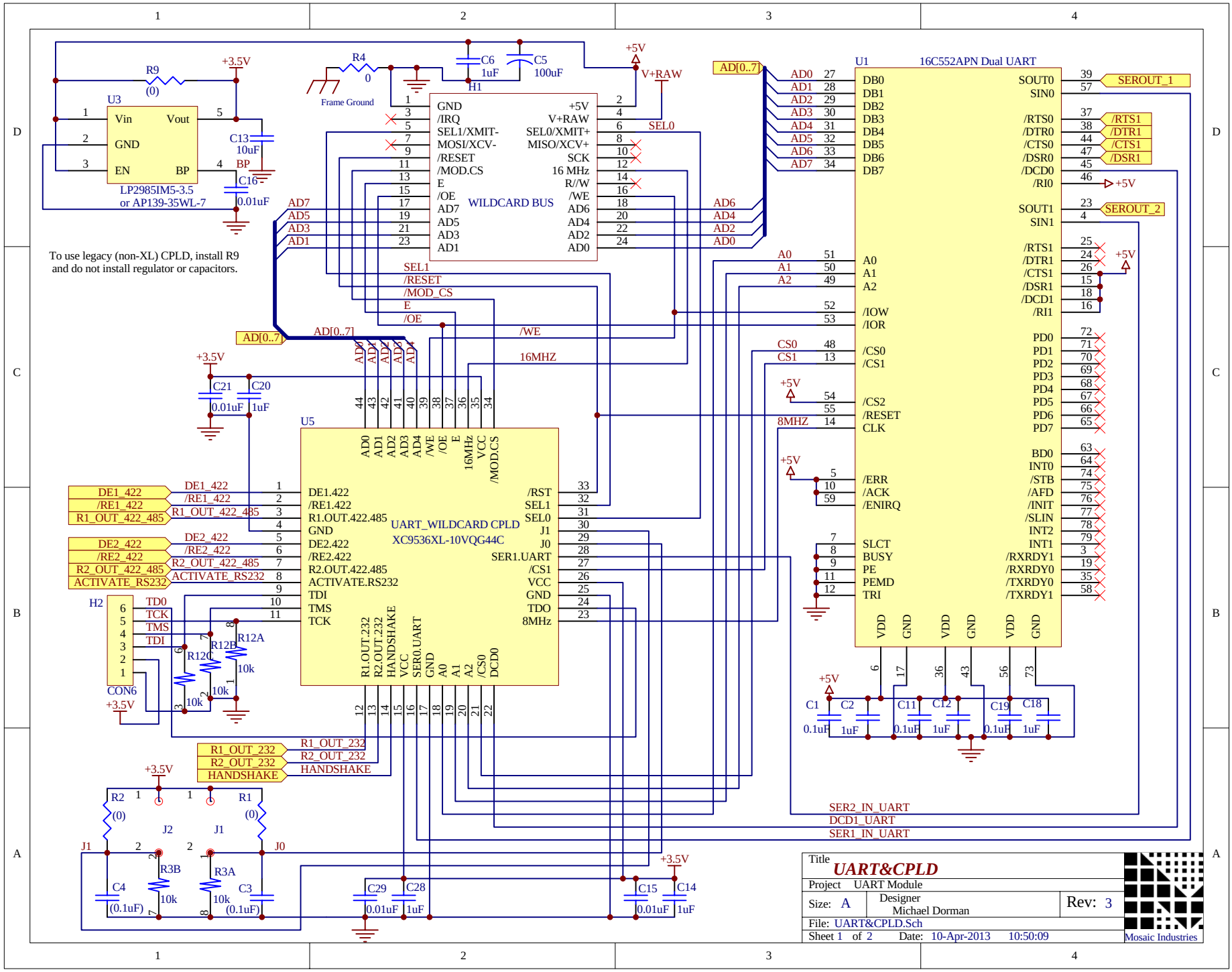
U3
LP2985IM5-3.5
or AP139-35WL-7
Vin
Vout
GND
EN
BP
R9
(0)
+3.5V
C13
10uF
C16
0.01uF
To use legacy (non-XL) CPLD, install R9
and do not install regulator or capacitors.
R4
0
Frame Ground
C6
1uF
C5
100uF
H1
WILDCARD BUS
GND
/IRQ
SEL1/XMIT-
MOSI/XCV-
/RESET
/MOD.CS
E
/OE
AD7
AD5
AD3
AD1
+5V
V+RAW
SEL0
SCK
16 MHz
R//W
/WE
AD6
AD4
AD2
AD0
MISO/XCV+
SEL1
/RESET
/MOD_CS
E
/OE
/WE
16MHZ
AD[0..7]
C21
0.01uF
C20
1uF
U5
UART_WILDCARD CPLD
XC9536XL-10VQG44C
DE1.422
/RE1.422
R1.OUT.422.485
GND
DE2.422
/RE2.422
R2.OUT.422.485
ACTIVATE.RS232
TDI
TMS
TCK
/RST
SEL1
SEL0
J1
J0
SER1.UART
/CS1
VCC
GND
TDO
8MHz
R1.OUT.232
R2.OUT.232
HANDSHAKE
SER0.UART
A0
A1
A2
/CS0
DCD0
DE1_422
/RE1_422
R1_OUT_422_485
DE2_422
/RE2_422
R2_OUT_422_485
ACTIVATE_RS232
H2
CON6
TD0
TCK
TMS
TDI
R12A
R12B
R12C
10k
R1_OUT_232
R2_OUT_232
HANDSHAKE
R2
(0)
R1
(0)
J2
J1
J0
R3B
R3A
C4
(0.1uF)
C3
(0.1uF)
C29
0.01uF
C28
1uF
C15
0.01uF
C14
1uF
U1
16C552APN Dual UART
DB0
DB1
DB2
DB3
DB4
DB5
DB6
DB7
SOUT0
SIN0
/RTS0
/DTR0
/CTS0
/DSR0
/DCD0
/RI0
SOUT1
SIN1
/RTS1
/DTR1
/CTS1
/DSR1
/DCD1
/RI1
A0
A1
A2
/IOW
/IOR
/CS0
/CS1
/CS2
/RESET
CLK
/ERR
/ACK
/ENIRQ
SLCT
BUSY
PE
PEMD
TRI
PD0
PD1
PD2
PD3
PD4
PD5
PD6
PD7
BD0
INT0
/STB
/AFD
/INIT
/SLIN
INT2
INT1
/RXRDY1
/RXRDY0
/TXRDY0
/TXRDY1
VDD
GND
SEROUT_1
/RTS1
/DTR1
/CTS1
/DSR1
SEROUT_2
8MHZ
C1
0.1uF
C2
1uF
C11
0.1uF
C12
1uF
C19
0.1uF
C18
1uF
SER2_IN_UART
DCD1_UART
SER1_IN_UART
Title
UART&CPLD
Project UART Module
Size: A
Designer
Michael Dorman
Rev: 3
File: UART&CPLD.Sch
Sheet 1 of 2
Date: 10-Apr-2013
10:50:09
Mosaic Industries