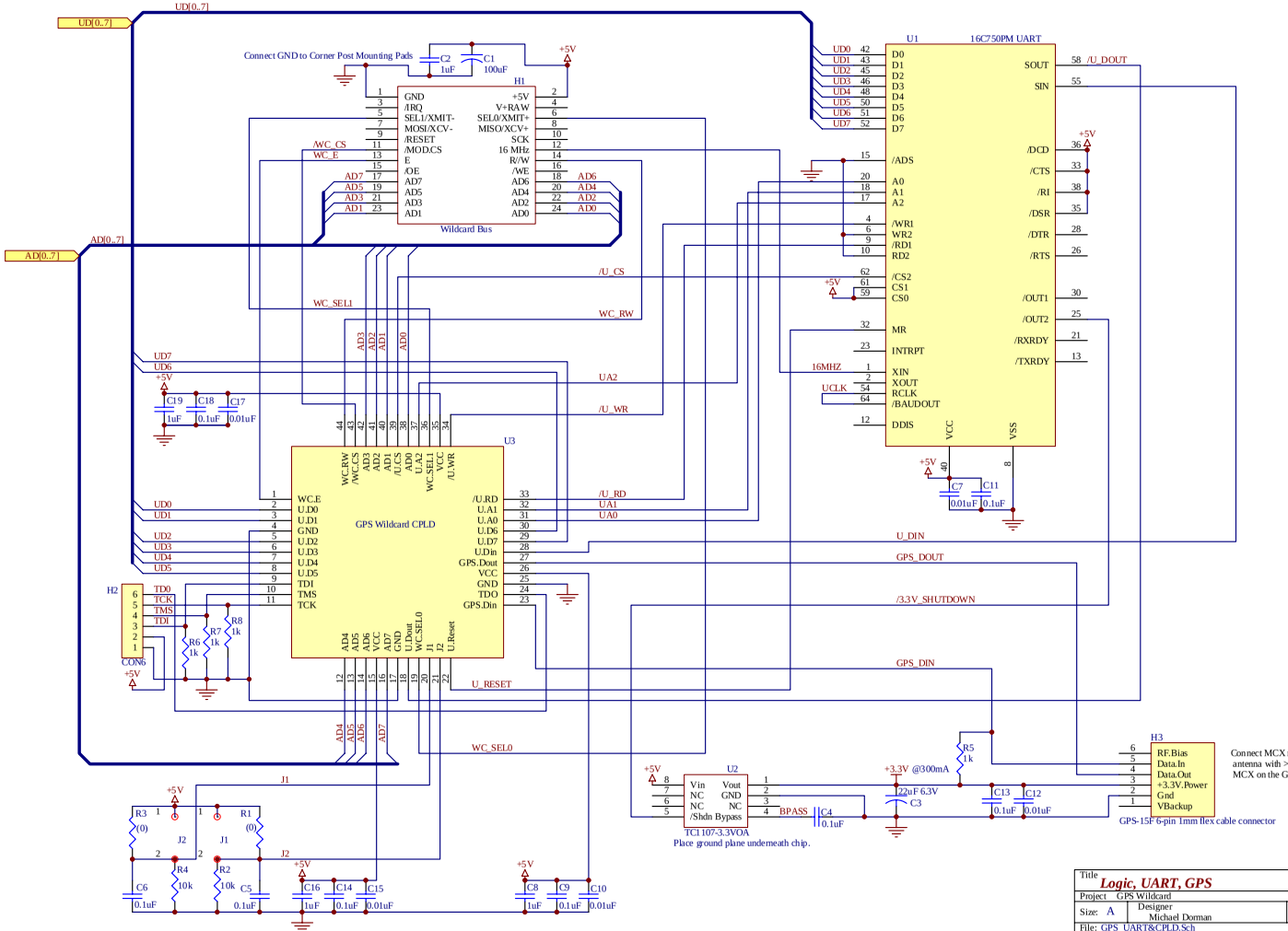
UD[0..7]
AD[0..7]
Connect GND to Corner Post Mounting Pads
C2 1uF
C1 100uF
+5V
H1
GND
/IRQ
SEL1/XMIT-
MOSI/XCV-
/RESET
/MODC.S
E
/OE
AD7
AD5
AD3
AD1
+5V
V+RAW
SEL0/XMIT+
MISO/XCV+
SCK
16 MHz
R/W
/WE
AD6
AD4
AD2
AD0
Wildcard Bus
/WC_CS
WC_E
U1
16C750PM UART
D0
D1
D2
D3
D4
D5
D6
D7
/ADS
A0
A1
A2
/WR1
WR2
/RD1
RD2
/CS2
CS1
CS0
MR
INTRPT
XIN
XOUT
RCLK
/BAUDOUT
DDIS
VCC
VSS
SOUT
SIN
/DCD
/CTS
/RI
/DSR
/DTR
/RTS
/OUT1
/OUT2
/RXRDY
/TXRDY
/U_DOUT
16MHZ
UCLK
/U_CS
WC_SEL1
WC_RW
UA2
/U_WR
U3
GPS Wildcard CPLD
WC.RW
/WC.CS
AD3
AD2
AD1
/U.CS
AD0
U.A2
WC.SEL1
VCC
/U.WR
WC.E
U.D0
U.D1
GND
U.D2
U.D3
U.D4
U.D5
TD1
TMS
TCK
/U.RD
U.A1
U.A0
U.D6
U.D7
U.Din
GPS.Dout
VCC
GND
TDO
GPS.Din
AD4
AD5
AD6
VCC
AD7
GND
U.Dout
WC.SEL0
J1
U.Reset
/U_RD
UA1
UA0
U_DIN
GPS_DOUT
/3.3V_SHUTDOWN
GPS_DIN
U_RESET
WC_SEL0
H2
CON6
TD0
TCK
TMS
TDI
R6 1k
R7 1k
R8 1k
U2
Vin
NC
NC
/Shdn
Vout
GND
NC
Bypass
TC1107-3.3VOA
Place ground plane underneath chip.
BPASS
C4 0.1uF
+3.3V @300mA
22uF 6.3V C3
R5 1k
C13 0.1uF
C12 0.01uF
H3
RF.Bias
Data.In
Data.Out
+3.3V.Power
Gnd
VBackup
GPS-15F 6-pin 1mm flex cable connector
Connect MCX male connector active antenna with >10 dB gain to the female MCX on the GPS-15F.
R3 (0)
R1 (0)
J2
J1
R4 10k
R2 10k
C6 0.1uF
C5 0.1uF
C16 1uF
C14 0.1uF
C15 0.01uF
C8 1uF
C9 0.1uF
C10 0.01uF
C19 1uF
C18 0.1uF
C17 0.01uF
C7 0.01uF
C11 0.1uF
Title
Logic, UART, GPS
Project GPS Wildcard
Size: A
Designer Michael Dorman
Rev: 1
File: GPS_UART&CPLD.Sch
Sheet 1 of 1
Date: 5-Mar-2007
10:31:24
Mosaic Industries